Product Page https://www.sunrom.com/m/5395

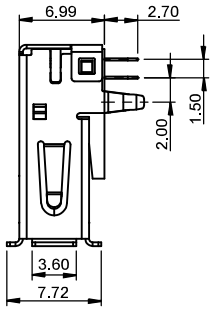


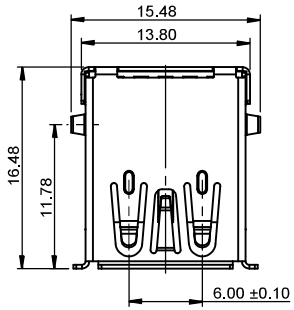


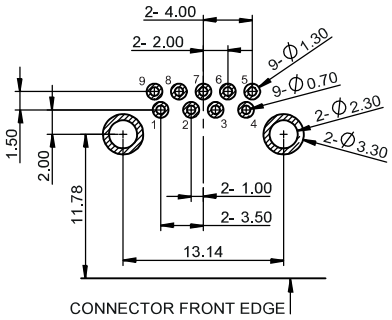


PCB LAYOUT * - COMPONENT VIEW
TOLERANCE ± 0.05 MM

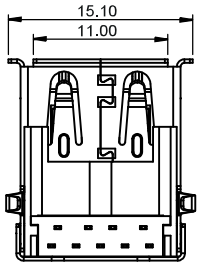


TECHNICAL CHARACTERISTICS

MATERIAL
INSULATOR: LCP
FLAMMABILITY RATING: UL94-V0
COLOR: BLUE
CONTACT MATERIAL: PHOSPHOR BRONZE
CONTACT TYPE: STAMPED
CONTACT PLATING: UNDERPLATE Nickel
CONTACT AREA Pd-Ni + Gold
SOLDER TAIL AREA Matt Tin
SHIELDING: BRASS MATT TIN PLATED
QUALITY CLASS: 5000 MATING CYCLES

ENVIRONMENTAL
OPERATING TEMPERATURE: -20°C up to +85°C
COMPLIANCE: LEAD FREE & RoHS

ELECTRICAL
CURRENT RATING:
- PIN 1 & PIN 4 (Vbus & corresponding ground PIN) 1.8A MAX
- OTHER PINS 0.25 A MAX
WORKING VOLTAGE: 30 VAC
DIELECTRIC WITHSTANDING VOLTAGE: 100 VAC/MIN
INSULATION RESISTANCE: > 100 MΩ
CONTACT RESISTANCE:
- PIN 1 & PIN 4: 30 mΩ MAX
- OTHER PINS: 50 mΩ MAX

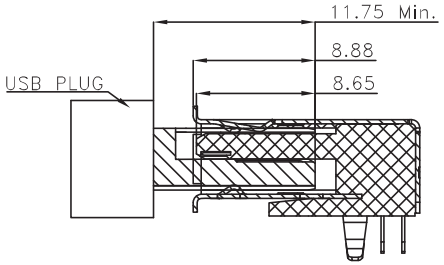


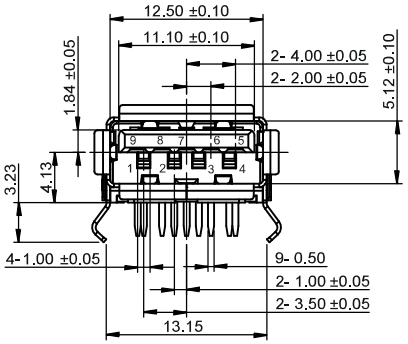


| Pin Number | Signal Name |
|---|---|
| 1 | VBUS |
| 2 | D- |
| 3 | D+ |
| 4 | GND |
| 5 | StdA_SSRX- |
| 6 | StdA_SSRX+ |
| 7 | GND_DRAIN |
| 8 | StdA_SSTX- |
| 9 | StdA_SSTX+ |
| Shell | Shield |

STANDARD
UL CERTIFIED: E323964

MECHANICAL
INSERTION FORCE: 35.0N MAX
EXTRACTION FORCE: 10.0N MIN

SOLDERING
JEDEC LEAD FREE WAVE SOLDERING

PACKAGING
TAPE & REEL

* NOTE: THE RECOMMENDED PCB LAYOUT IS FOR AN OPTIMIZED RETENTION FORCE OF CONNECTOR ON PCB BUT IT IMPLIES INSERTION FORCE THAT A LOT OF PICK AND PLACE MACHINES ARE NOT ABLE TO HANDLE. THEREFORE IT MIGHT BE NECESSARY TO DRILL BIGGER HOLES FOR THE CLIPS. PLEASE CHECK THIS CARFULLY.

RoHS Compliant

| REV | DATE | FILE | BY |
|---|---|---|---|
| I | 27-OCT-14 | GENERAL UPDATE | AS |
| H | 01-APR-14 | SOLDERING | QL |

PROJECTION:

GENERAL TOLERANCE
.X = +/- 0.2
.XX = +/- 0.15

APPROVAL: NPr

UNIT: MM
SCALE:
SHEET: 1/3
DRAW: AS

WÜRTH ELEKTRONIK

DESCRIPTION: WR-COM - USB 3.0 HORIZONTAL TYPE A

WERI PART NO: 692 121 030 100

SIZE A4