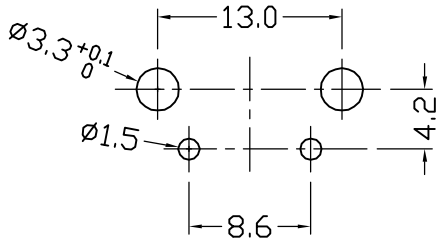

PCB. LAYOUT

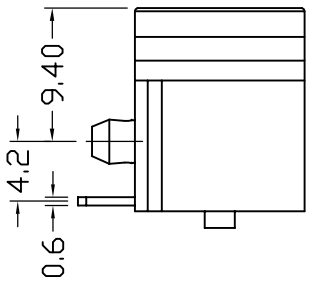

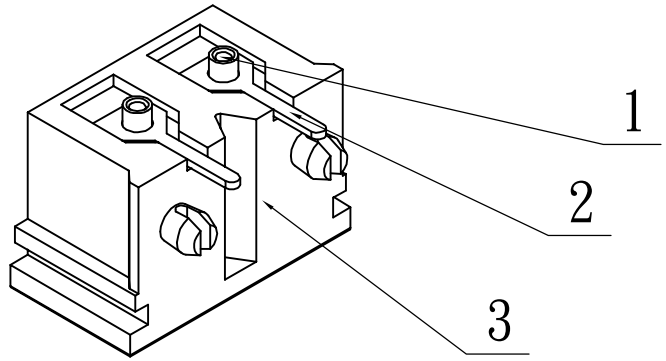

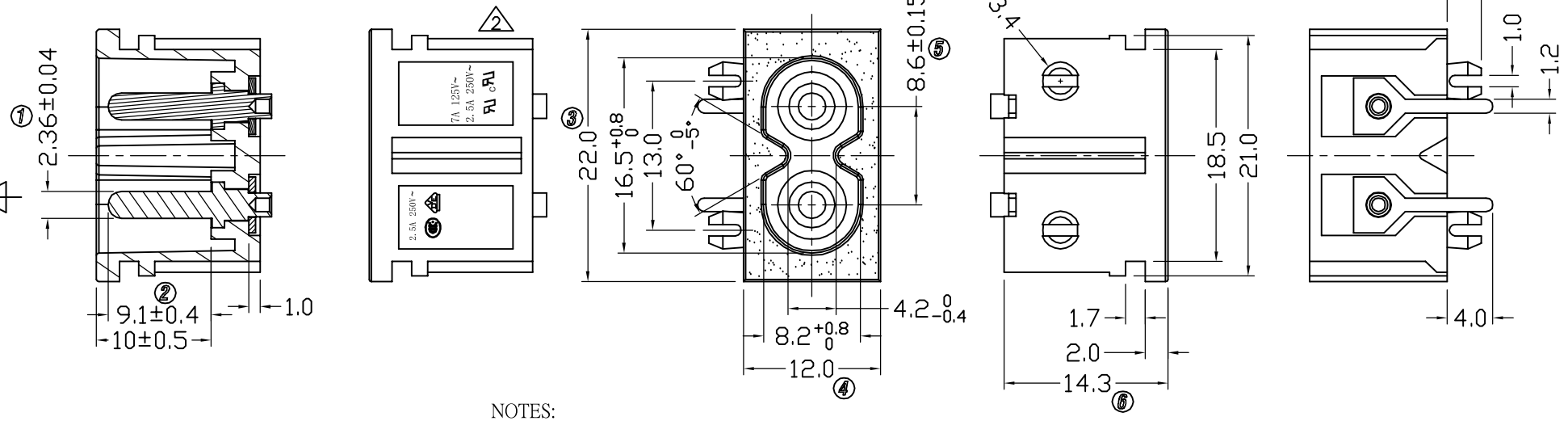

NOTES:

1.Rating：2.5A 250VAC CCC VDE
2.5A 250VAC UL CUL
7A 125VAC UL CUL

2.Contact resistance：50mΩ Max

3.Insulation resistance：>100MΩ (Min) 500VDC

4.Dielectric strength：>2000VAC 0.5mA 1 minutes

NO.	PART NAME	MATERIAL		Q'TY
3	BODY	PA66 UL94V-0	Black & White	1
2	1# terminal	C2680 1/2H	Tin-plating 3~5μm	2
1	1# PIN	C3602	Ni-plating 3~5μm	2

SUNROM.COM

PRODUCT NAME

AC Socket 2P 2.5A 250V IEC320-C8 Male PCB Mount

PRODUCT CODE	PRODUCT URL	DATE
7667	https://www.sunrom.com/m/7667	01/04/2025